THREADED TERMINAL: STEEL PIPE POST WITH ANGLED TERMINATION – STAIRS

NOTE: DETAIL IS TYPICAL FOR 1/8", 3/16" AND 1/4" DIAMETER STANDARD CABLERAIL™ ASSEMBLIES.

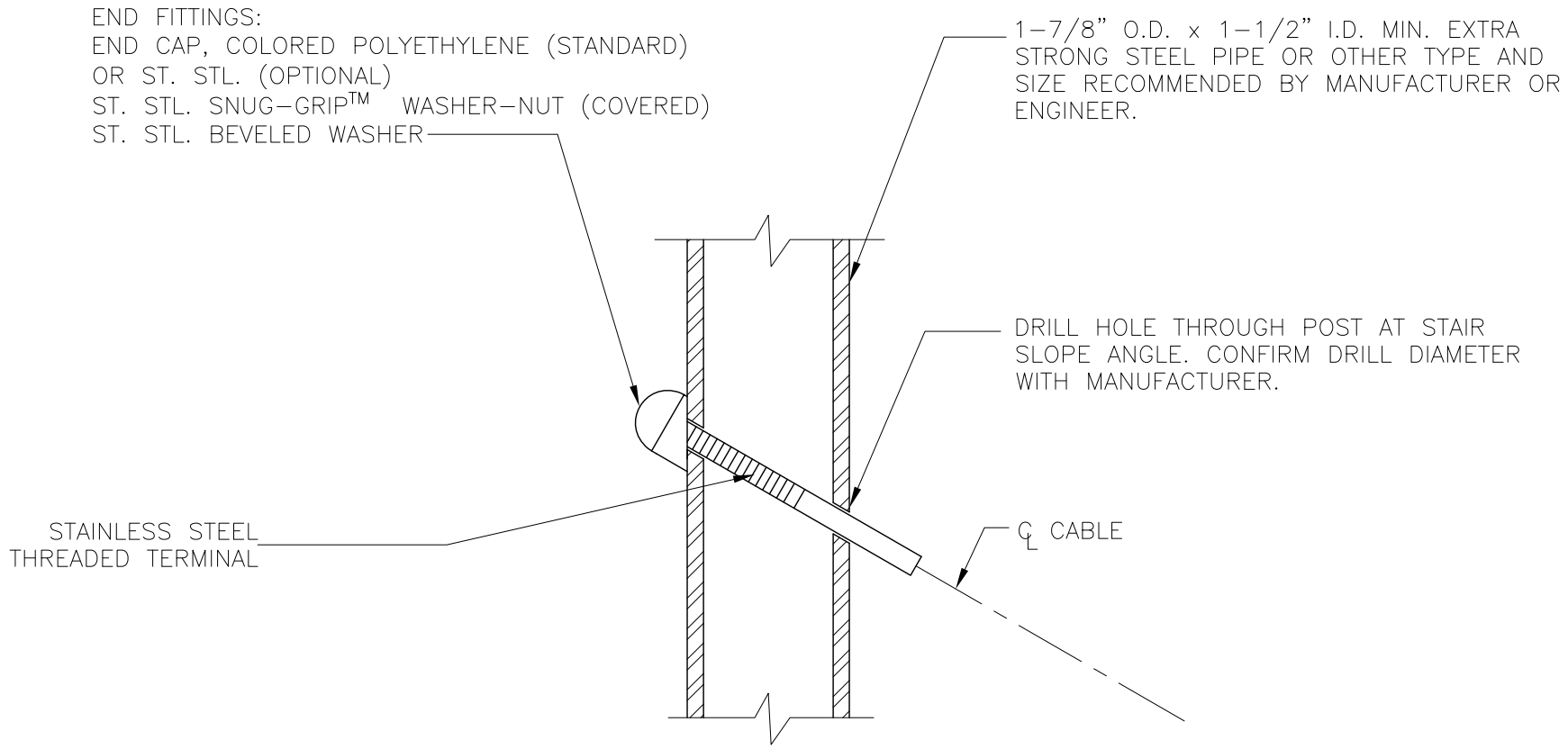

CableRail Reference Drawing:

THREADED TERMINAL FITTING IN STEEL POST AT STAIRS

THIS DRAWING IS THE PROPERTY OF FEENEY INC. ANY REPRODUCTION OF THIS DOCUMENT WITHOUT THE EXPRESSED WRITTEN CONSENT OF FEENEY INC. IS STRICTLY PROHIBITED.

DATE:	05/15/13
PAGE:	1 of 1
REV:	
BY:	DSY
CHK:	BWA

feeney
makes it easy
2603 Union St., Oakland, CA 94607
P: 800-888-2418 F: 510-893-9484
www.feeneyinc.com